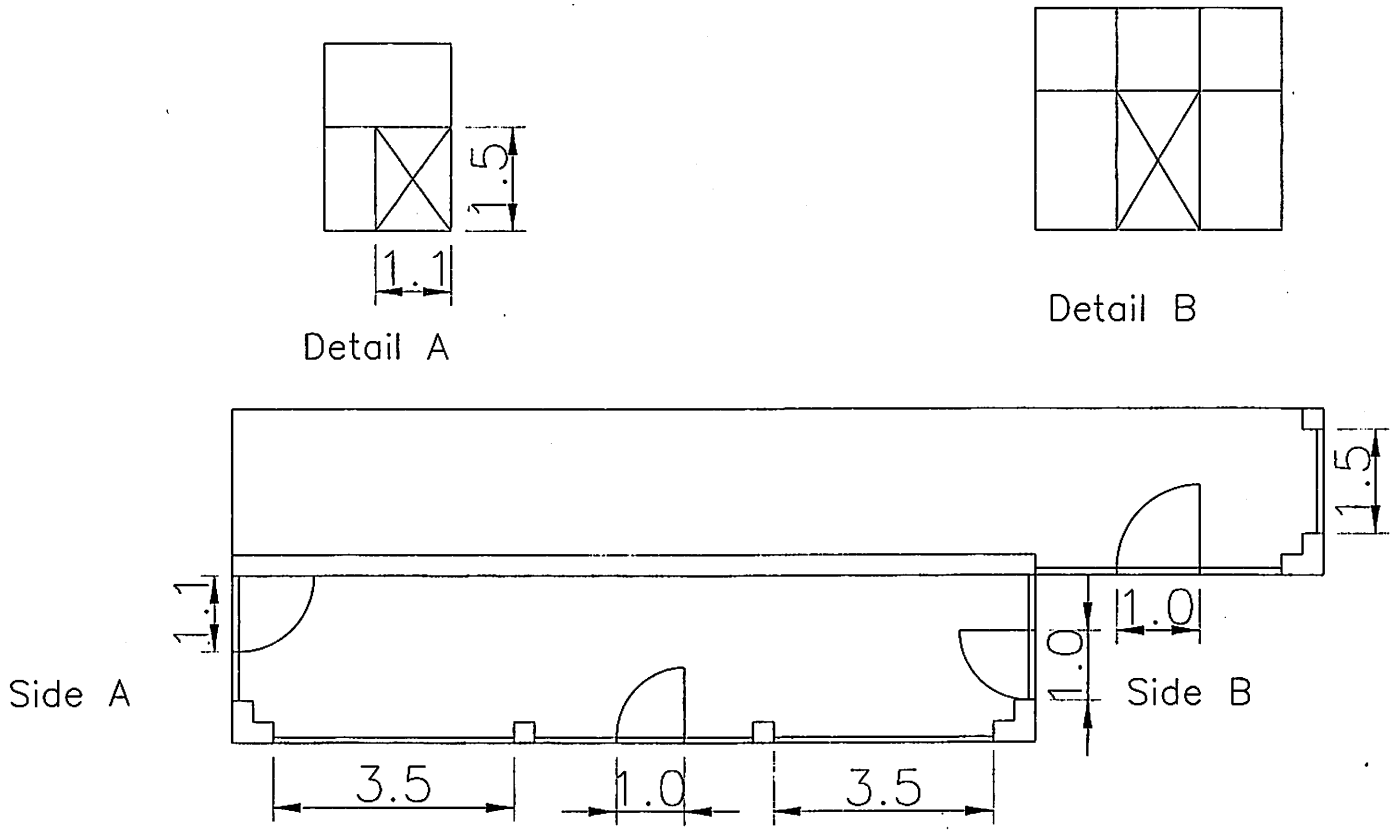

Back patios at the villas

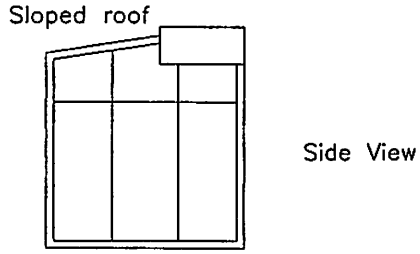

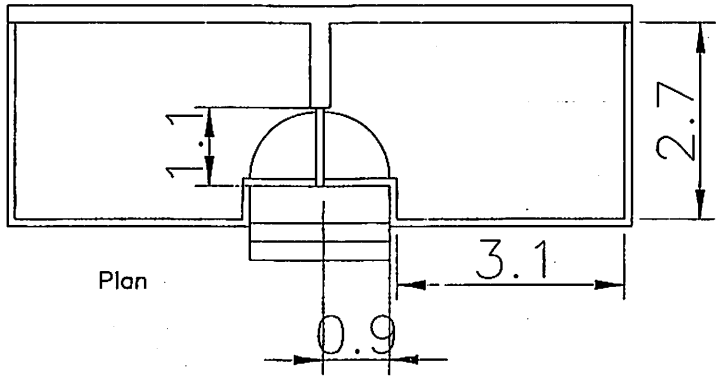

Back patios at the Townhouses

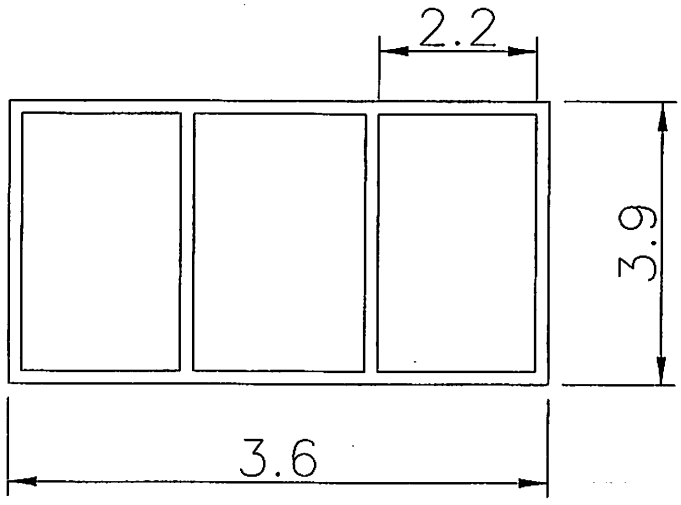

Back balconies at OBO 247